2 µm Polarization Maintaining Fiber Optic Circulator (PMCIR Series)

Rev 11C

Description

The 2 µm Fiber Optic Circulator is a high performance lightwave component that routes incoming signals from Port 1 to Port 2, and incoming Port 2 signals to Port 3.

Key Features

- High Power Handling
- Low Insertion Loss

Applications

- Fiber Laser
- Fiber Optic Instruments

Specifications

Parameter	Unit	Value
Operating Wavelength	nm	1950 or 2000
Max. Insertion Loss, λc ± 30 nm	dB	1.5
Min. Isolation, λc ± 30 nm	dB	16
Min. Crosstalk	dB	40
Min. Return Loss	dB	50
Min. Extinction Ratio	dB	18
Max. Average Optical Power	W	0.3, 0.5, 1, 2 or 5
Max. Peak Power (Pulse Width,10 ns)	kW	10
Max. Tensile Load	N	5
Fiber Type	-	Specified by ordering info.
Operating Temperature	℃	- 5 to + 70
Storage Temperature	℃	- 40 to + 85
Package Dimensions	mm	12 × 17 × 39

[1]IL is 0.3 dB higher, RL is 5 dB lower, and ER is 2 dB lower for each connector added. Connector key is aligned to slow axis.
[2]The Optical Power is 1 W only for connector added.
[3]All of above value are tested at room temperature @ 23 ℃, unless other specified.

Package Dimensions

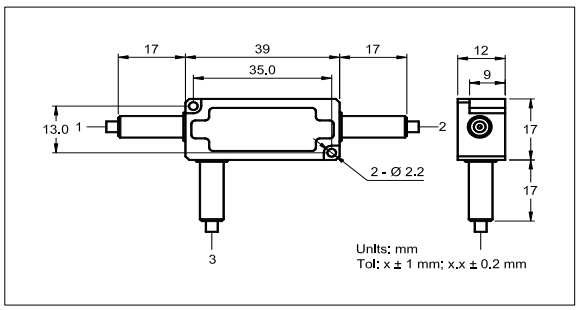

Ordering Information

PMCIR-①①①①-②-③-④-⑤-⑥-⑦-⑧

①①①①: Wavelength	②: Handling Power		③: Connector Type		④: Fiber Jacket
2000 - 2000 nm	03 - 0.3 W	05 - 0.5 W	1 - FC/UPC	3 - SC/UPC	B - 250 µm Panda Fiber
SSSS - Specify	1 - 1 W	5 - 5 W	2 - FC/APC	4 - SC/APC	L - 900 µm Loose Tube
	2 - 2 W	S - Specify	N - None	S - Specify	S - Specify

⑤: Fiber Length

Q - 0.75 m

S - Specify

⑥: Working Axis

F - Fast Axis Blocked

B - Both Axis Working

⑦: Fiber Type

1 - PM1550 Fiber

2 - Nufern PM1950 Fiber

3 - Thorlabs PM2000 Fiber

⑧: Power Type

P - Pulsed

C - Continuous Wave