Advanced Fiber Resources (HK), Ltd.

1550nm Polarization Maintaining Optical Circulator (PMCIR Series)

Rev11

The Optical Circulator is a compact, high performance lightwave component that routes incoming signals from Port 1 to Port 2, and incoming Port 2 signals to Port 3. The component provides high isolation, low insertion loss, high extinction ratio and excellent environmental stability.

Specifications

Parameter	Unit	Value
Center Wavelength (λc)	nm	1550
Operating Wavelength Range	nm	λc ± 10
Min. Extinction Ratio	dB	20
Max. Insertion Loss	dB	1
Min. Isolation	dB	20
Min. Crosstalk	dB	45
Min. Return Loss	dB	50
Max. Optical Power (Continuous Wave)	mW	300
Max. Tensile Load	N	5
Operating Temperature	℃	0 to +40
Storage Temperature	℃	-40 to +85
Fiber Type		PM 1550 fiber
Package Dimensions	mm	(L)34×(W)8.4×(H)8.4

*IL is 0.3 dB higher, RL is 5 dB lower and PER is 2 dB lower for each connector added. Key aligned to slow axis.

Package Dimensions

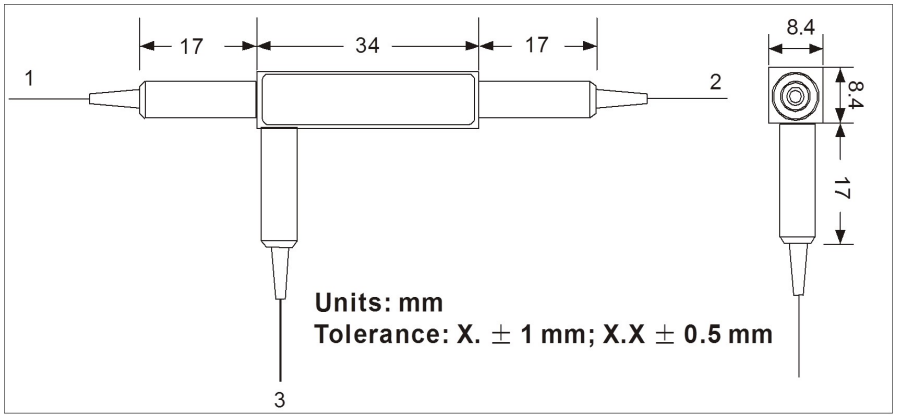

Ordering Information

PMCIR-①①-②-③-④-⑤

①①: Wavelength	②: Connector Type	③: Fiber Type	④: Fiber Length	⑤: Polarization Status
55 - 1550 nm	1 - FC/UPC	B - 250 um bare fiber	Q - 0.75 m	B - Both axes working
SS - Specify	2 - FC/APC	L - 900 um loose tube	S - Specify	
	3 - SC/UPC	S - Specify		
	4 - SC/APC			
	N - None			